MODEL: LHT-64

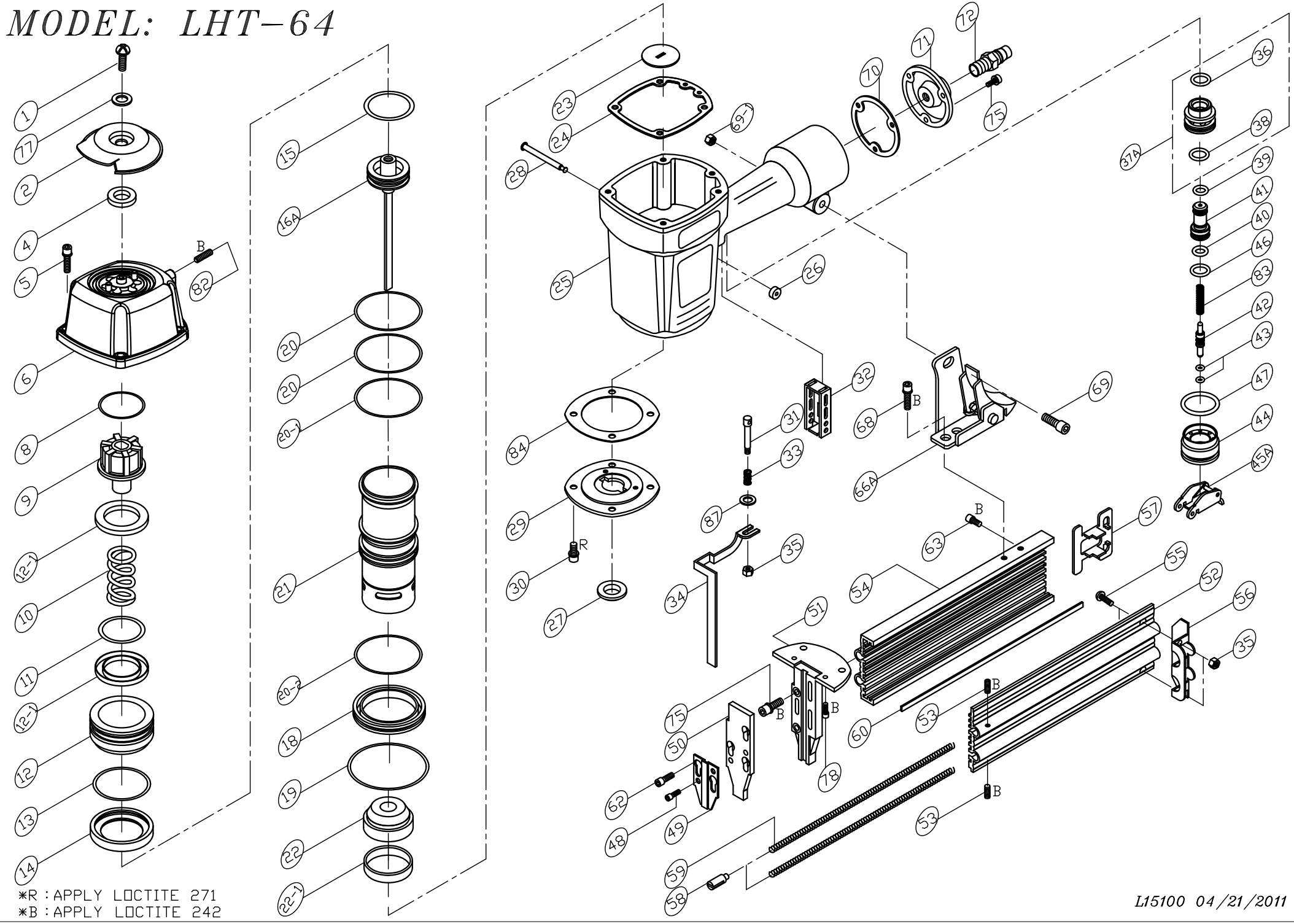

*R : APPLY LOCTITE 271
*B : APPLY LOCTITE 242

L15100 04/21/2011

PARTS LIST (LHT-64)

*WHEN ORDERING SPARE PARTS,PLEASE STATE ITEM No,PART NO.AND DESCRIPTION.

ITEM	PART NO	DESCRIPTION	QTY	ITEM	PART NO	DESCRIPTION	QTY	ITEM	PART NO	DESCRIPTION	QTY
01	US05080L-20	UM.HD.BOLT	1	34	15103401	SAFETY LEVER	1	71	15107101	END CAP	1
02	15100202	EXHAUST COVER	1	35	LN0500N	LOCK NUT	3	72	12106401	AIR PLUG	1
04	15300401	PU RING	1	36	OR14018N	O-RING	1	75	HS05080BW-16	HEX.SOC.HD.BOLT+SW	5
05	HS06100LW-25	HEX.SOC.HD.BOLT+SW	4	37A	15103701A	VALVE ASM.	1	77	FW060130B-10	FLAT WASHER	1
06	15100601	CAP	1	38	OR17515N	O RING**	1	78	HS05080B-07	HEX.SOC.HD.BOLT	2
08	15100801	SPACER	1	39	OR05819N	O RING**	1	82	SS06100B-06	SET SCREW	1
09	15100901	PISTON STOPPER**	1	40	OR06020N	O RING**	1	83	15108301	SPRING	1
10	15101001	SPRING**	1	41	15104101	VALVE PLUNGER	1	84	15108401	GASKET**	1
11	OR41630N	O RING**	1	42	15104201	PLUNGER	1	87	FW060130B-20	FLAT WASHER	1
12	15101202	PISTON HEAD VALVE	1	43	OR02515V	O RING**	2				
12-1	15100401	SPACER	2	44	15104401	PLUNGER CAP	1				
13	OR52126N	O RING	2	45A	15104501A	TRIGGER ASSEMBLY	1				
14	15101401	SEAL	1	46	OR08819N	O RING**	1				
15	OR45735N	O RING**	1	47	OR19824N	O RING**	1				
16A	15101601A	PISTON ASSEMBLY	1	48	HS04070L-06	HEX.SOC.HD.BOLT	2				
18	15301801	CYLINDER SPACER	1	49	15104901	NOSE COVER	1				
19	OR74431N	O RING	1	50	15105001	DRIVER GUIDE COVER	1				
20	OR53726N	O RING**	2	51	15105101	NOSE	1				
20-1	OR47735N	O RING**	1	52	15105201-A01	MAGAZINE COVER	1				
20-2	OR54431N	O RING**	1	53	SS04070B-12	SET SCREW	2				
21	15302103	CYLINDER	1	54	15105401-A01	MAGAZINE	1				
22	15102202	BUMPER**	1	55	US05080B-10	UM.HD.BOLT	2				
22-1	15102203	COLLAR	1	56	15105601	TAIL COVER	1				
23	15102301	WASHER	1	57	15105702	PUSHER	1				
24	15102401	GASKET**	1	58	15105801	SLIDE BLOCK	2				
25	15102501	BODY	1	59	15105901	SPRING**	2				
26	16103001	PU RING**	2	60	15106001	NAIL GUIDE LINER	1				
27	15102701	SET BLOCK	1	62	HS05080L-12	HEX.SOC.HD.BOLT	3				
28	16102902	STEPPED PIN	2	63	HS05080B-10	HEX.SOC.HD.BOLT	1				
29	15102902	BOTTOM	1	66A	15106101A	BRACKET ASSEMBLY	1				
30	HS06100BW-20	HEX.SOC.HD.BOLT+SW	4	68	HS05080BW-08	HEX.SOC.HD.BOLT+SW	2				
31	15103101	SPRING GUIDE	1	69	HS06100B-22	HEX.SOC.HD.BOLT**	1				
32	15103201	GUIDE SAFETY LEVER	1	69-1	LN0600N	LOCK NUT	1				
33	15103301	SPRING	1	70	15107001	GASKET	1				

NO：L15100

DATE:04/21/2011